FEMALE END VIEW	MALE END VIEW	WIRING DIAGRAM

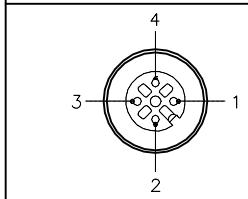

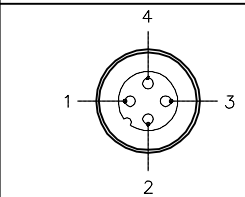

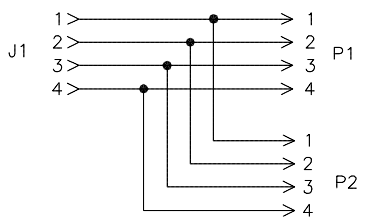

SPECIFICATIONS

CONTACT CARRIER MATERIAL	NYLON OR TPU
MOLDED HEAD MATERIAL/COLOR	TPU/YELLOW
CONTACT MATERIAL/PLATING	BRASS/GOLD
COUPLING NUT MATERIAL/PLATING	BRASS/NICKEL
RATED CURRENT [A]	4.0 A
RATED VOLTAGE [V]	250 V
OUTER JACKET MATERIAL/COLOR	TPU/YELLOW
CONDUCTOR INSULATION MATERIAL	PVC
NUMBER OF CONDUCTOR [AWG]	4x18 AWG
TEMPERATURE RATING	−40°C to +90°C (−40°F to +194°F)
PROTECTION CLASS	MEETS NEMA 1,3,4,6P AND IEC IP67

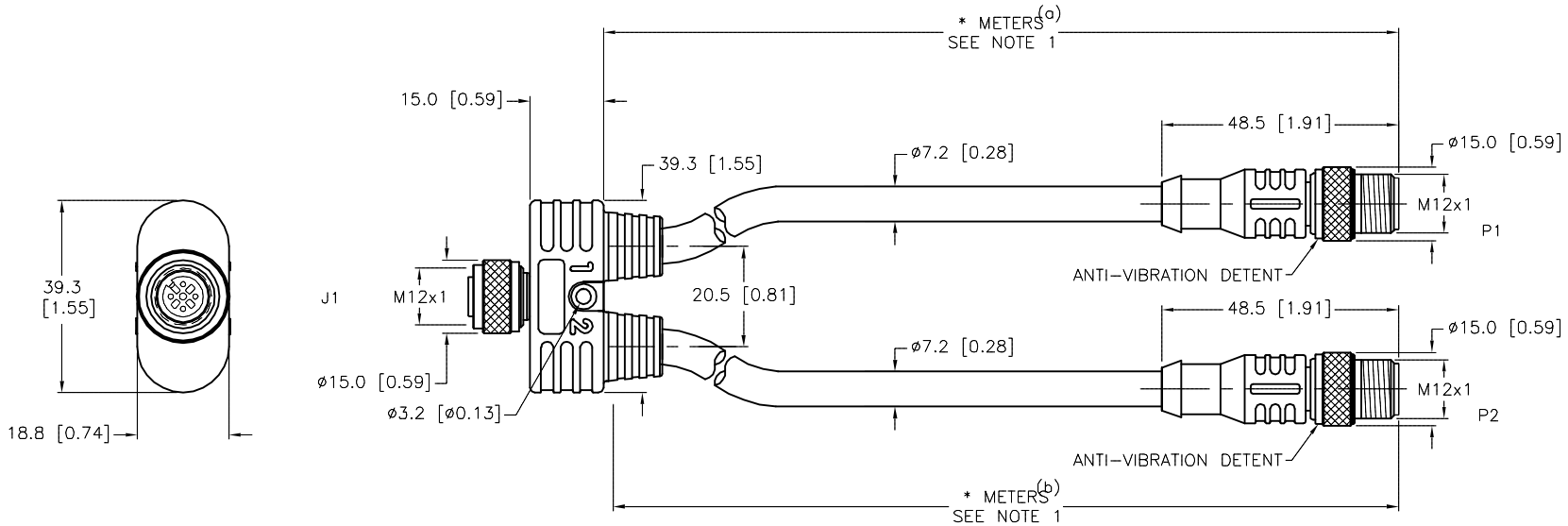

CABLE LENGTH	TOLERANCE *
ALL LENGTHS	+ 4% (OR 50mm) OF LENGTH − 0% (OR 0mm) OF LENGTH WHICHEVER IS GREATER
STRIP LENGTH	**TOLERANCE ***
0−7mm	±0.5mm
8−29mm	±1.0mm
30−49mm	±2.0mm
50−69mm	±3.0mm
70−100mm	±4.0mm
OVER 100mm	±5.0mm
* UNLESS OTHERWISE SPECIFIED	

SOURCE DRAWING - FOR REFERENCE ONLY

NOTES:

1. "*" INDICATES CABLE LENGTH IN METERS. CONTACT TURCK TO ORDER SPECIFIC LENGTHS.
2. "/S90" DESIGNATES POLYURETHANE (TPU) CABLE.
3. "/S651" DESIGNATES PARALLEL WIRING.

REV	DESCRIPTION	BY	DATE	ECO NO.
A	DRAWING RELEASE	NF	05/05/16	

RELATED DOCUMENTS
1.
2.
3.
4.

3RD ANGLE PROJECTION

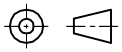

THIS DRAWING IS CONFIDENTIAL AND THE PROPERTY OF TURCK INC. USE OF THIS DOCUMENT WITHOUT WRITTEN PERMISSION IS PROHIBITED.

TURCK INC
High Technology Sensors and Automation Controls
3000 CAMPUS DRIVE
MINNEAPOLIS, MN 55441
1−800−544−7769
(763) 553−7300
(763) 553−0708 fax
turck.com

MATERIAL: SEE SPECIFICATIONS

FINISH: SEE SPECIFICATIONS

ALL DIMENSIONS DISPLAYED ON THIS DRAWING ARE FOR REFERENCE ONLY

CONTACT TURCK FOR MORE INFORMATION

DRFT	NF	DATE	04/26/16
APVD	L.H.	SCALE	1=1.5

UNIT OF MEASUREMENT
MILLIMETER [INCH]
DO NOT SCALE THIS DRAWING

DESCRIPTION: YBZ2−FKM 4.4−2RSC 4.4T−*/*/S90/S651 (a) (b)

IDENTIFICATION NO.

REV: A

FILE: 777037411

SHEET 1 OF 1

Approved 04/26/2016, work order #103710 by L.H.